Electric platform truck 2.0 ton

Simai

Four wheel-series

PE20

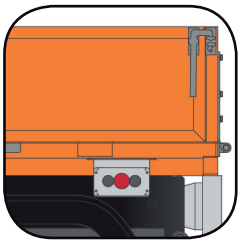

TOYOTA

MATERIAL HANDLING

http://www.simai.it/en

Electric platform truck 2.0 ton

Truck specifications					PE20
Identification	1.1	Manufacturer			Simai S.p.A
	1.2	Model			PE20
	1.3	Drive			Electric
	1.4	Operator type			Sit-on
	1.5	Load capacity/rated load [1]	Q	kg	2000
	1.7	Rated drawbar pull	F	N	1750
	1.9	Wheelbase	y	mm	1935
Weight	2.1	Service weight		kg	2130
	2.2	Axle load, with load, front/rear		kg	1815 / 2475
	2.3	Axle load, without load, front/rear		kg	1130 / 1000
Tyres	3.1	Tyre - Cushion(Cu), Extra-elastic(SE), Pneumatic(Pn),Polyurethane			SE/Pn
	3.2	Tyre - size, front			6.00-9
	3.3	Tyre - size, rear			6.00-9
	3.5	Wheels, number front/rear (x = driven wheels)			2/2X
	3.6	Track width, front	b_{10}	mm	850
	3.7	Track width, rear	b_{11}	mm	1200
Dimensions	4.7	Height of cab	h_6	mm	1870
	4.8	Seat height	h_7	mm	855
	4.12	Coupling height	h_{10}	mm	355
	4.13	Loading height, min/max	h_{11}	mm	655/735
	4.16	Length of loading surface	l_3	mm	2000
	4.17	Overhang	l_5	mm	1300
	4.18	Width of loading surface	b_9	mm	585
	4.19	Overall length	l_1	mm	3465
	4.21	Overall width	b_1	mm	1435
	4.32	Ground clearance, centre of wheelbase	m_2	mm	200
	4.35	Turning radius	W_a	mm	3475
	4.36	Internal turning radius	b_{13}	mm	790
Performance data	5.1	Travel speed, with/without load		km/h	18 / 23
	5.6	Max. drawbar pull		N	6100
	5.7	Gradeability		%	see chart
	5.8	Max. gradeability loaded/unloaded		%	see chart
	5.10	Service / parking brake (I=Hydraulic E=Electromagnetic M=Mechanical)			I / M
Electric motor	6.1	Drive motor rating S2 60 min		kW	7
	6.4	Battery voltage, nominal capacity [2]	K_5	V/Ah	48/ 480
	6.5	Battery weight		kg	830
	6.6	Energy consumption according to VDI cycle [3]		kWh/h	
Others	8.1	Electronics control			Inverter AC
	8.4	Sound level at driver's ear according to EN 12053		dB(A)	69

[1] Towing capacity: 6000 kg
[2] Performances and weight are intended with 480 Ah battery.
[3] Contact the supplier for information.

As per VDI guidelines 2198, this datasheet applies to standard electric tractor / platform truck only.
Dimensions are not binding and can be changed in any moment. The performances must be intended for brand new machines, after having completed the running-in tested in San Donato Milanese factory in normal climatic conditions.
Performances and weight are to be intended with standard motors and battery and with pneumatic tires.
Some data can vary according to different equipments.

Towed weight

READING EXAMPLE:
CHARGE = 1 TONS
GRADIENT = 7 %
DRAWBAR PULL = 3330 N
SPEED = 8,2 Km/h
MAX PRACTICABLE RAMP LENGHT = 2000 m

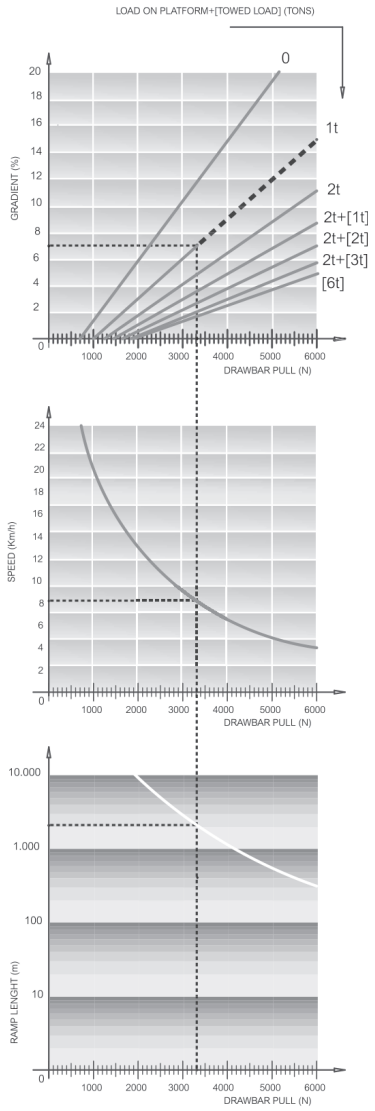

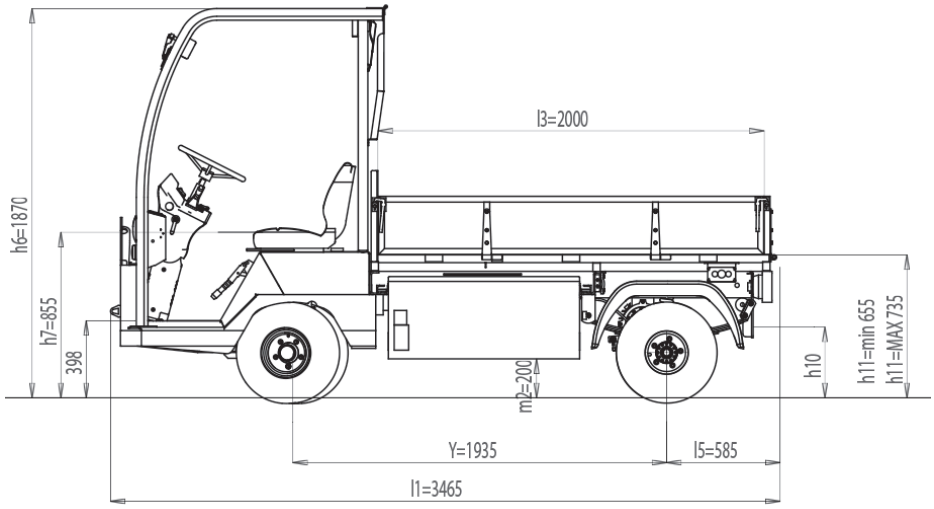

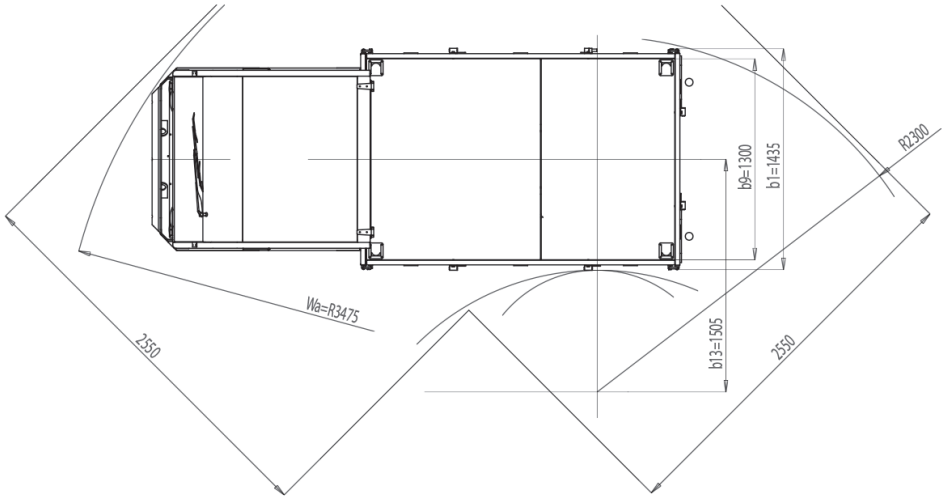

Standard equipments:

- Operator presence system
- AC power system
- Pneumatic tyres
- Rear drawbar
- Automatic parking brake
- Regenerative braking
- Head and tail lights, turn signal lights
- Digital display

TMHE-Toyota Material Handling Europe — version 1, 2018-08-23

TOYOTA

MATERIAL HANDLING